CXM

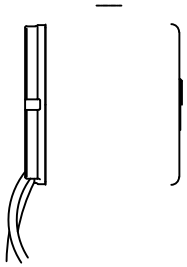

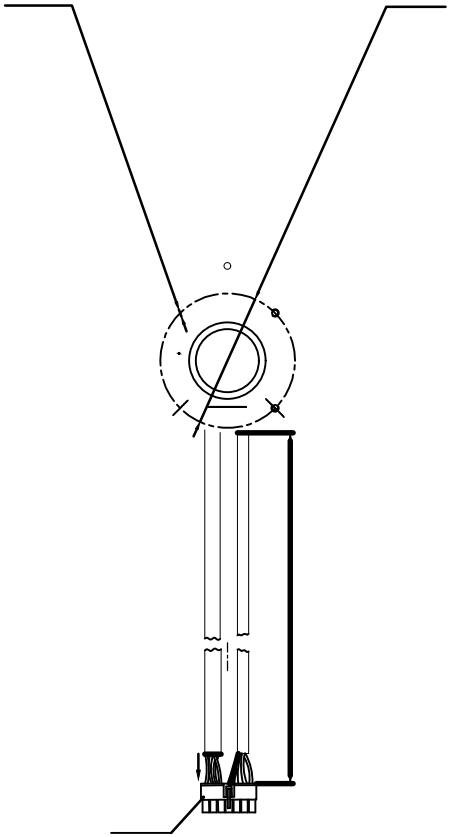

SPecification( )

1.BLDC Centrifugal fan type( ):FLH470/040A-2213HT04

2.Impeller type

			A				1:4
			1				1

FLH470/040A-2213HT04

FLH470/040A-2213HT04